NOTES: 1) INTERNAL 1000 LINE ENCODER , 4000 ENCODER COUNTS PER REVOLUTION.
INDEX LINE ON ENCODER WHEEL.
2) TIED INTERNALLY: TX : CN2 PIN 10 TO CN1 PIN 3
RX : CN2 PIN 11 TO CN1 PIN 4
+5V : CN2 PIN 12 TO CN1 PIN 2
GND : CN2 PIN 13, CN2 PIN 14 AND CN1 PIN 5 TIED TO CN1 PIN A2
3) DRIVE AND CONTROLLER POWER ON SEPARATE PINS.
MUST PROVIDE POWER TO CONTROL AND DRIVE POWER TO OPERATE.
TO DISABLE DRIVE, DISCONNECT DRIVE (AMPLIFIER) POWER ON CN1.
4) FIRMWARE VERSION: 4.70

PART NO.
SM3400D-DE-PLS

PART REVISIONS				
ECO	REV	DESCRIPTION	DATE	APPROVED
3586	1	PRODUCTION RELEASE	1/27/03	TC

CN1: 7 PIN COMBO D-SUB MALE CONNECTOR		
PIN#	NAME	FUNCTIONS
1	I/O G	G-Synchronization Pin
2	+5V OUT	+5V Out
3	RS232 TX	RS232-Transmit
4	RS232 RX	RS232-Receive
5	GND	Signal Ground
A1	DRV POWER	Drive Power,+20 to 48V dc
A2	PWR GND	Power Ground

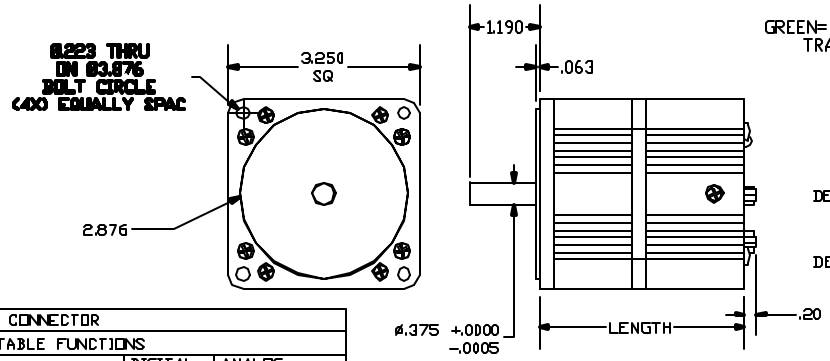

MODEL	LENGTH
SM3410D-DE-PLS	3.488
SM3420D-DE-PLS	4.138
SM3430D-DE-PLS	4.788
SM3440D-DE-PLS	5.438
SM3450D-DE-PLS	6.088

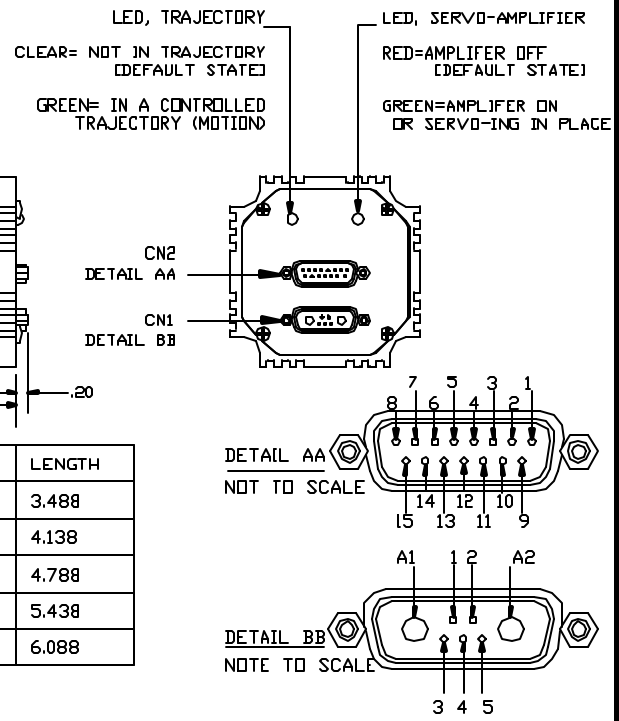

CN2: 15 PIN D-SUB FEMALE CONNECTOR					
		SOFTWARE SELECTABLE FUNCTIONS			
PIN#	NAME	FUNCTIONS	FUNCTIONS	DIGITAL I/O (TTL)	ANALOG INPUT (10 bit)
1	I/O A	Ext Encoder A Input	Step Input	5V	0 to 5V
2	I/O B	Ext Encoder B Input	Direction Input	5V	0 to 5V
3	I/O C	Positive (Right) Limit Input		5V	0 to 5V
4	I/O D	Negative (Left) Limit Input		5V	0 to 5V
5	I/O E	Anilink Data	RS-485 Signal A	5V	0 to 5V
6	I/O F	Anilink Clock	RS-485 Signal B	5V	0 to 5V
7	I/O G	G-Synchronization Pin	RS-485 Adapter Flow Control Line	5V	0 to 5V
8	ENCA OUT	Encoder A Output			
9	ENCB OUT	Encoder B Output			
10	RS232 TX	RS232-Transmit			
11	RS232 RX	RS232-Receive			
12	+5V OUT	+5V DC Output			
13	GND	Signal Ground			
14	PWR GND	Power Ground			
15	CONTROL PWR	Controller Power, +20V to 48V dc			

ITEM NO.	QTY	PART NO.	DESCRIPTION	MATERIAL SPECIFICATION

PARTS LIST

UNLESS OTHERWISE SPECIFIED,DIMENSIONS & TOLERANCES ARE PER ANSI Y14.5M AND ARE IN INCHES. TOLERANCES ARE AS FOLLOWS
DECIMALS .XX± .XXX± ANGLES ±.XX°±

THIRD ANGLE PROJECTION

MATERIAL
ALUMINUM

FINISH
BLACK ANODIZE

APPROVALS	DATE
DRAWN TC	1/27/03

SCALE 1/1

Animatics Corporation

TITLE
SM3400D-DE-PLS
SERIES, DB15 I/O

SIZE B | COMPUTER GENERATED DRAWING | PART NO. SM3400D-DE-PLS | REV 1

SIMILAR TO SM3400D-DE | CAD FILE NAME 34MOTOR.DWG | SHEET 1 OF 1