REV.	DESCRIPTION	ZONE	ECO	DATE	APPROVED
A	PRELIMINARY RELEASE			01/20/2011	M. TRAN

NOTES:
1. DRAWING APLLIES TO THE FOLLOWING SMARTMOTOR WITH PART NUMBERS:
   SM23105D SM23205D SM23305D SM23405D
   SM23105D-DE SM23205D-DE SM23305D-DE SM23405D-DE
2. LED, SERVO-AMPLIFIER:
   - CLEAR = CONTROLLER POWER NOT AVAILABLE
   - RED = FAULT
   - FLASH GREEN = DRIVE (AMPLIFIER) IS OFF
   - GREEN = DRIVE (AMPLIFIER) IS ON

   LED, TRAJECTORY
   - CLEAR = NOT IN CONTROLLED TRAJECTORY (DEFAULT STATE)
   - GREEN = IN CONTROLLED TRAJECTORY (CLOSE LOOP MOTION)
3. FOR -DE OPTION, DRIVE POWER AND CONTROLLER POWER ARE ON SEPARATE PINS. MUST PROVIDE POWER TO CONTROLLER AND DRIVE POWER TO OPERATE. SEE TABLE CN2 BELOW FOR PIN ASSIGNMENT.
4. DIMENSIONS IN [ ] ARE mm.
5. RECOMMENDED BOLTING SCREW SIZE TO BE 10-32 OR M5, SOCKET CAP.

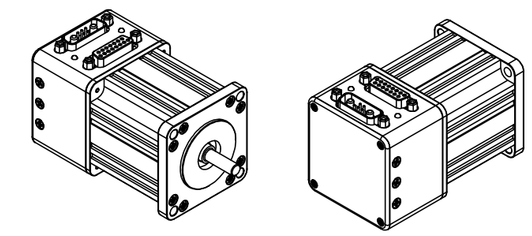

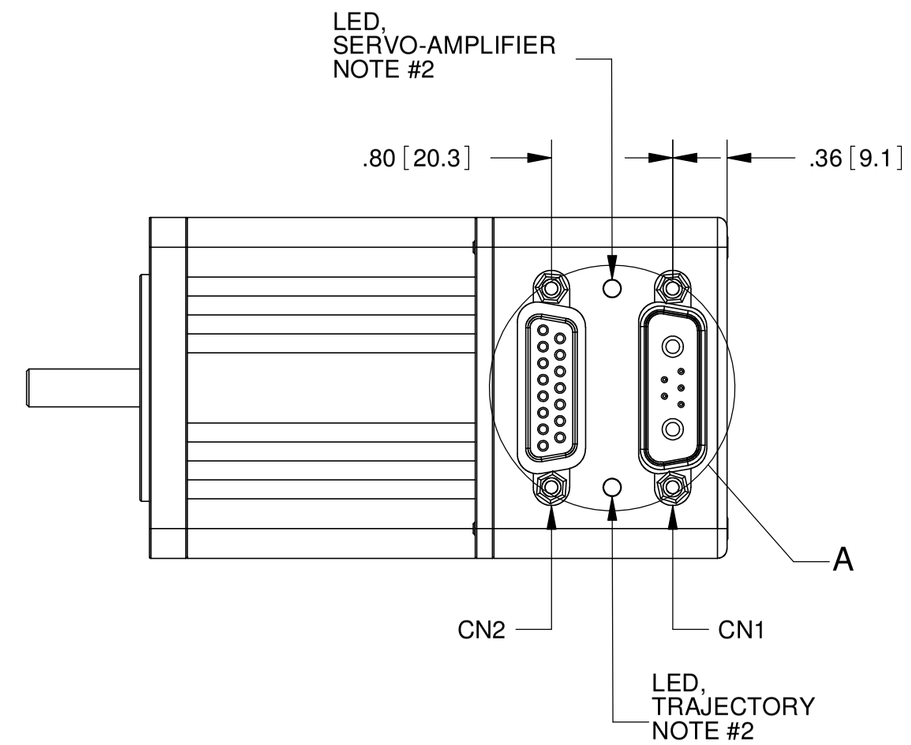

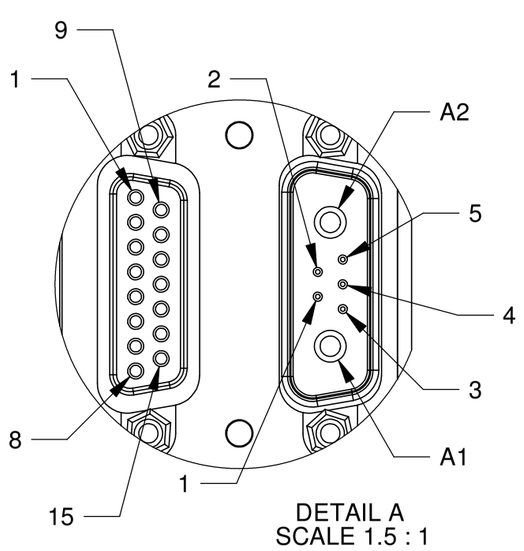

DETAIL A
SCALE 1.5 : 1

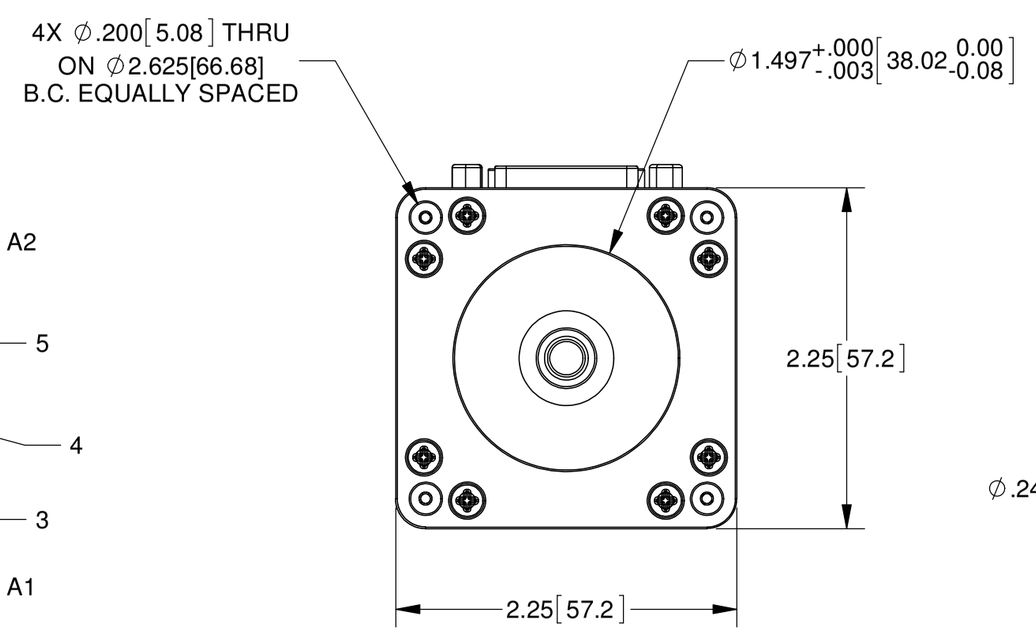

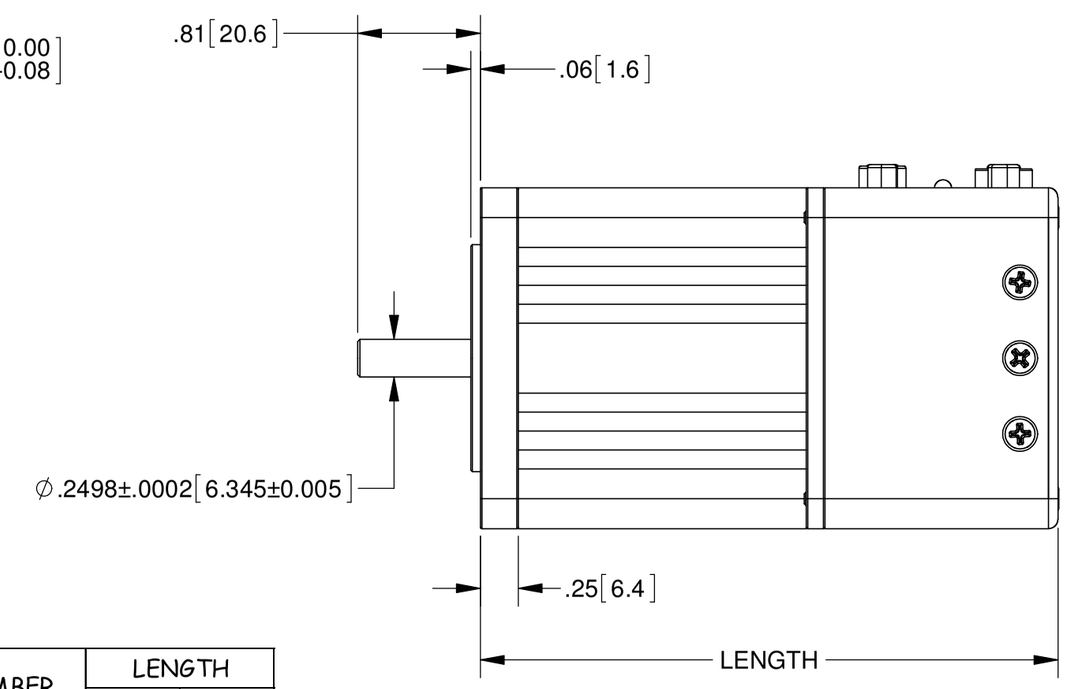

PART NUMBER	LENGTH	
	in	mm
SM23105D	3.17	80.4
SM23205D	3.75	95.3
SM23305D	4.40	111.8
SM23405D	5.05	128.3

CN2 : 15PIN D-SUB FEMALE CONNECTOR

PIN #	NAME	FUNCTIONS			
		Default Function	Secondary Function	Digital I/O	Analog Input
1	I/O A	External Encoder A Input	Step Input	5V TTL	0 to 5V
2	I/O B	External Encoder B Input	Direction Input	5V TTL	0 to 5V
3	I/O C	Positive Limit Input		5V TTL	0 to 5V
4	I/O D	Negative Limit Input		5V TTL	0 to 5V
5	I/O E		RS485 A (+)	5V TTL	0 to 5V
6	I/O F		RS485 B (-)	5V TTL	0 to 5V
7	I/O G	G-Synchronization	RS485-ISO Adopter Data	5V TTL	0 to 5V
8	ENC A OUT	Encoder A Output			
9	ENC B OUT	Encoder B Output			
10	RS232 Tx	RS232 Transmit			
11	RS232 Rx	RS232 Receive			
12	+5Vdc OUT	+5Vdc Supply Out			
13	GND	Signal GND			
14	POWER GND	POWER GND	For -DE Option, Pin 15 is Contorl power (20V to 48V) and		
15	POWER	POWER	Pin 14 is PWR GND. ^PIN 15 is not connected to A1.		

CN1 : 7PIN COMBO D-Sub Male Connector

PIN #	NAME	FUNCTIONS	Ties to CN2, PIN #
1	I/O G	G-Synchronization	7
2	+5V dc OUT	+5Vdc Output	12
3	RS232 Tx	RS232 Transmit	10
4	RS232 Rx	RS232 Received	11
5	GND	Signal GND	13
A1	DRIVE PWR	Dirve Power (20 - 48Vdc)	15^
A2	POWER GND	POWER GND	14

MATERIAL: ALUMINUM HOUSING
FINISH: BLACK ANODIZED HOUSING
DRAWN: M. TRAN DATE: 01/20/2011
ENGR: DATE:

INCH
THIRD ANGLE PROJECTION

UNLESS OTHERWISE SPECIFIED:
DIMENSIONS ARE INCHES AND TOLERANCES ARE:
DECIMALS: .XXX ± .005, .XX ± .03
ANGLES: .XX ± 0.25°, .X ± 0.5°

INTERPRET DIMENSIONS AND TOLERANCES PER ASME Y14.5M - 1994.
ALL DIMENSIONS, TOLERANCES AND ROUGHNESS APPLY AFTER FINISHING, WHEN APPLICABLE.
NO BURRS ALLOWED, BREAK SHARP EDGES .01 MAX.

Animatics Corporation

TITLE: SM23x05D SERIES

SIZE: C DWG NO: SM23x05D
DO NOT SCALE DRAWING SCALE 1:1 SHEET 1 OF 1